HT23 RTJ O / PRO

OUT

OUTSTANDING PERFORMANCE & PRODUCTIVITY

- Very good working envelope
- Basket load capacity 230 kg
- Dual load 230-450 kg (option)

BEST COMFORT AND SAFETY FEELING

- Haulotte Activ'Shield Bar 2.0 (standard on PRO)
- Haulotte Activ'Lighting System for safe loading/unloading in conditions of low visibility (standard on PRO)
- Quick, proportional and simultaneous movements
- Rigid boom

MINIMIZED TOTAL COST OF OWNERSHIP

- Haulotte Activ'Screen diagnostic display for onboard fault & service alerts
- Haulotte Stop Emission System automatically turns the engine off & on
- Easy access to all components
- Exclusive modular basket, quick and easy to repair

HT23 RTJ O / PRO

ROUGH TERRAIN TELESCOPIC BOOMS

TECHNICAL DATA

	HT23 RTJ O 4WD/2WS	HT23 RTJ PRO 4WD/4WS
Working height	22.5 m	
Platform height	20.5 m	
Horizontal outreach	18.3 m	
Below ground reach	4 m	
Lift capacity	230 kg (2 pers.) - option : 450 kg (3 pers.)	
F x G Platform size	2.44 x 0.91 m	
A Length - stowed	10.4 m	
H Storage / transport length	7.8 m	
B Overall width	2.47 m	
C Height - stowed	2.7 m	
I Storage / transport height	3.3 m	
Vertical jib rotation	133° (+68/-65)	
Platform rotation	180° (+90/-90)	
Boom rotation angle	90° (+75/-15)	
Turntable rotation	360° continuous	
Tailswing	109 cm	
D Wheelbase	2.5 m	
E Ground clearance	34 cm	
Tilt	5°	
Drive speed	0.5 - 6.5 km/h	
Maximum wind speed rating	45 km/h	
Gradeability	40 %	
Turning radius - outside	6.3 m	3.4 m
Tyres - foam-filled	385/65 - 22.5	
Fuel tank	166 l	
Engine	Kubota 37 kW, (stage 5) ; Kubota 36.5kW (LRC & China 4)	
Weight	13 320 kg	13 400 kg

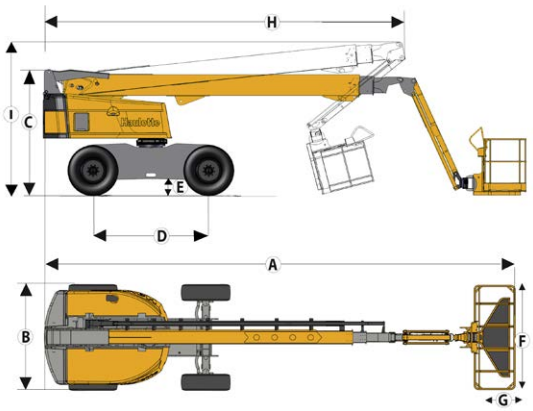

STANDARD EQUIPMENT

> Haulotte Activ'Lighting System (standard on PRO)
> Haulotte Activ'Shield Bar (standard on PRO)
> Haulotte Stop Emission System
> Haulotte Activ'Screen onboard colored monitor screen and diagnostic system
> Universal telematics plug
> 4 wheel drive / 2 (O) or 4 (PRO) wheel steer
> Front oscillating axle increases stability on uneven ground
> Proportional controls enhance comfort and safety
> 4 simultaneous movements for maximum productivity
> Automatic differential wheel lock increase rough terrain capacity
> Upper control box protection cover and tool tray in ultra-solid composite
> Large modular basket 2.44 x 0.91 m, drop entry gate
> Basket limitation +/- 10°
> Prepared for power to platform 110 / 230V
> Swing out engine tray for ease of maintenance
> Sound and light alarm for tilt and load
> Rotating beacon
> Driving alarm
> Hour meter
> Electric pump system and emergency descent
> 12 V battery
> Engine pre-heater with light indicator
> Low fuel level indicator (upper control box)

OPTIONS AND ACCESSORIES

> Haulotte Activ'Lighting System (O model)
> Haulotte Activ'Shield Bar 2.0 (O model)
> Dual load capacity 230 / 450 kg (2-3 persons)
> Narrow modular platform 1.83 m x 0.8 m
> Power to platform (Female plug in the basket with or without circuit-breaker 30mA)
> Air line to platform
> Lateral swing door entry gate
> 3.5 kW, 6,5 kW, 12 kW (Only NA) hydraulic generator
> Biodegradable hydraulic oil
> 60km/h wind speed
> Warm environment package
> Cold weather package / Kit Arctic
> Pipe cradle pack
> Glazier pack
> Working lights

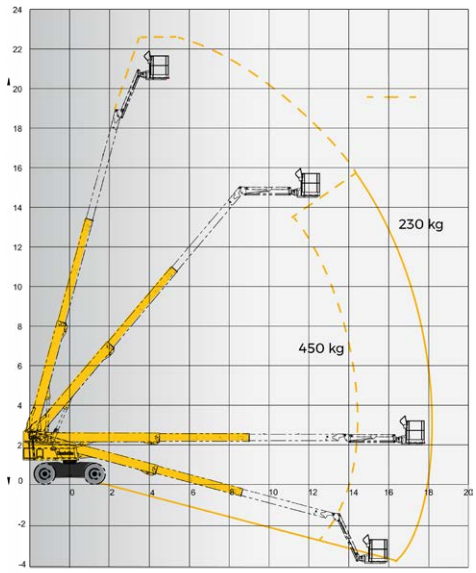

4000029990 · Non contractual document · We reserve the right to modify the technical characteristics of this document without notice · 01/2023

Haulotte · Rue Emile Zola - 42420 Lorette - France · Tel: +33 (0)4 77 29 24 24 · Fax: +33 (0)4 77 29 43 95
haulotte@haulotte.com · **www.haulotte.com**

Haulotte
LET'S DARE TOGETHER