STAR 6

GO EVERYWHERE

- High precision driving & smoothness
- Quick machine
- Comfort & agility
- Indoor / outdoor rated (versatile)
- Easy access to the platform
- Smart transportability & lifting

WITH THE BEST VALUE FOR MONEY

- Robust machine
- Smart mast system
- Minimal maintenance & downtime
- Direct electric drive with brushless AC motors
- Easy access to components
- Haulotte Activ'Screen (onboard diagnostic)

Haulotte EQUIPMENT

STAR 6

VERTICAL MASTS

TECHNICAL DATA

	STAR 6
Working height	5.8 m
Platform height	3.8 m
Lift capacity - inside	230 kg (2 pers.)
Lift capacity - outside	230 kg (1 pers.)
Platform size	0.77 x 1.38 m
A Length	1.4 m
B Width	0.79 m
C Height - stowed	1.75 m
D Wheelbase	1.06 m
E Ground clearance	6 cm
Drive speed proportional	0.8 - 4.5 km/h
Turning radius - outside	1.7 m
Tilt alarm	1.5 ° / 3 °
Gradeability	25 %
Driveable at full height up to	3.8 m
Tyres - non marking	318 x 108
Power source	12 V - 105 Ah (C5)
Weight	835 kg

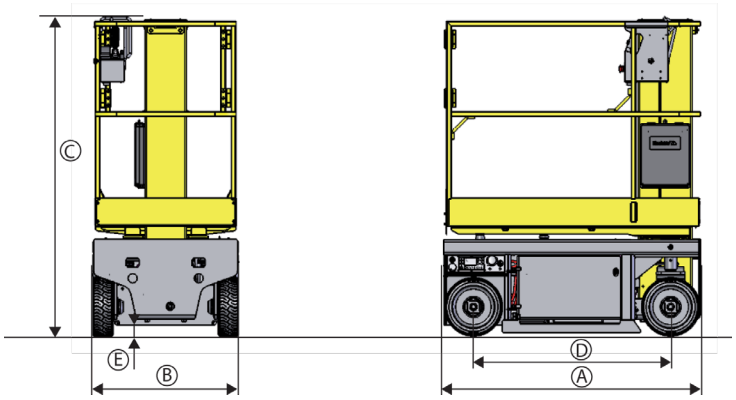

STANDARD EQUIPMENT

> 24 V electric drive brushless AC motors
> 2 x 12 V - 105 Ah batteries
> 20 A battery charger
> Battery charge indicator
> Haulotte Activ'Screen
> Fork lifting eyes
> Hoisting and lifting eyes
> Swing door entry gate
> Mobile potholes
> 2 front steering wheels
> 2 rear driving wheels
> Non marking tyres
> Brake release
> Hourmeter
> Horn
> Travel alarm
> Emergency stop
> Emergency hand pump
> 2 control stations at cage and ground level
> Mobile upper control box
> 2 towing hooks
> Protection baseboard

OPTIONS AND ACCESSORIES

> Upper control box protection cover
> Tool tray
> Platform extension deck + 0.4 m (height stowed: 1.8 m)
> Power line in platform
> Ground-fault circuit interrupter 30 mA
> Telematics ready
> Biodegradable oil
> Hydraulic oil for cold countries
> Flashing light
> Fluorescent tube caddy

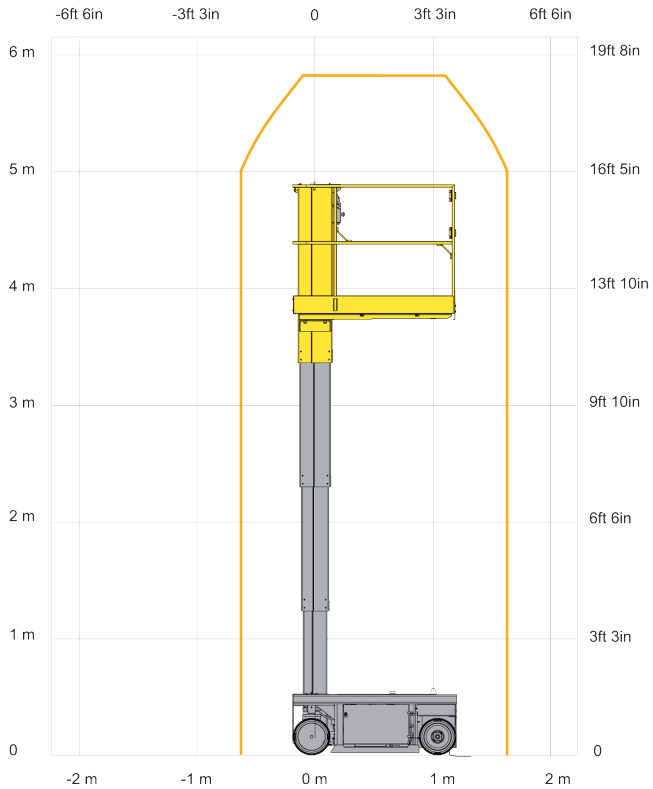

2420604710 - Non contractual document - We reserve the right to modify the technical characteristics of this document without notice - 11/2018

La Péronnière - BP 9 - 42152 l'Horme - France · Tel: +33 (0)4 77 29 24 24 · Fax: +33 (0)4 77 29 43 95 ·
haulotte@haulotte.com · **www.haulotte.com**

Haulotte
LET'S DARE TOGETHER